REVISION	B

RoHS Compliant

SYMB	REVISON	DATE	APVD.

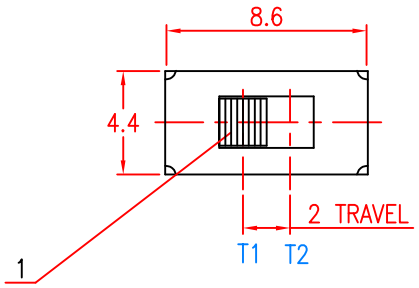

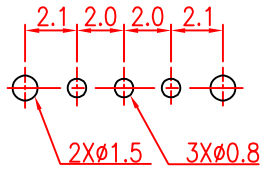

P.C.B LAYOUT

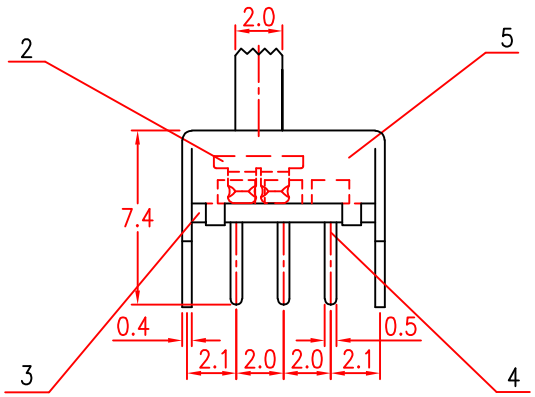

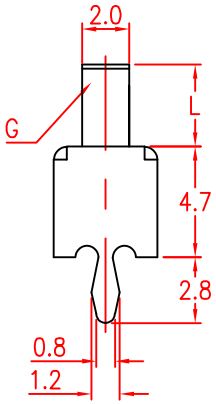

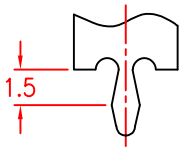

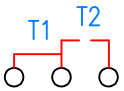

CIRCUIT

L=3.0mm

TITLE	SLIDE SWITCH	DRAWN	L.Liu
PART NO.	XB-SS-12D02	CHECKED	G.C.Chen
DRAW NO.	S2-1	APPROVED	H.K.Lai
SCALE: 3:1	UNIT: mm	DATE: 13-08-2003	

TOLERANCE OTHERWISE UNLESS SPECIFIED	
UP TO 5	±0.2
ABOVE 5 ~ 30	±0.3
ABOVE 30 ~ 50	±0.4
ABOVE 50	±0.5
ANGLE	±3°

NO.	PARTS	MATERIAL	QTY.	FINISHING
8				
7				
6				
5	FRAME	SPCC	1	Ni PLATED
4	TERMINAL	C2680	3	Ag PLATED
3	BASE	PHENOLIC RESIN	1	NATURAL
2	CONTACT PLATE	C5210	1	Ag PLATED
1	KNOB	POM	1	BLACK

东莞市溪榜电子有限公司
DONG GUAN XI BANG ELECTRONI CS CO., LTD.

Copyright Reserved,Please Do Not Copy. 版权所有,不得翻印.