REV	DESCRIPTION	DRW	DATE
A	NEW	wang	2012-5-16

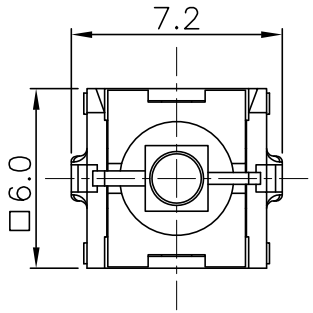

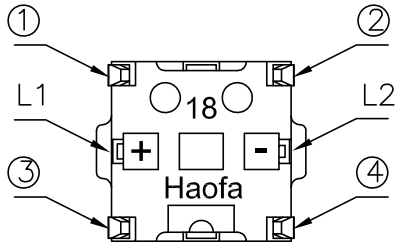

NOTES:
1.RATING: 12VDC 50mA
2.CONTACT RESISTANCE: 100mΩ Max
3.INSULATION RESISTANCE: 100MΩ 250VDC FOR 1MIN
4.DIELECTRIC STRENGTH: 250VAC(50/60Hz) FOR1MIN
5.LIFE TEST:100,000 CYCLES
6.OPERATION FORCE&TRAVEL: SEE SPECIFICATION

CIRCUIT

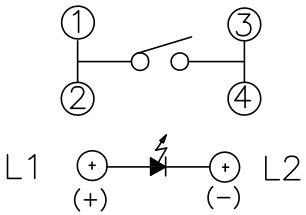

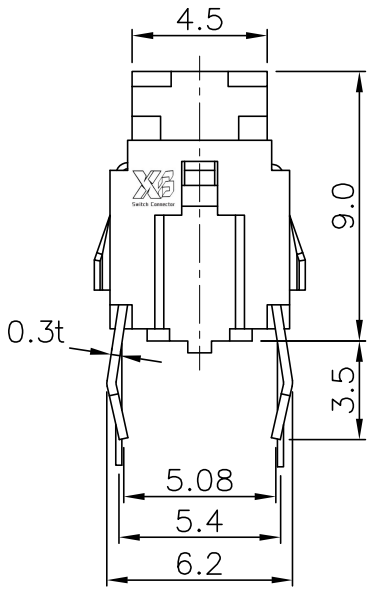

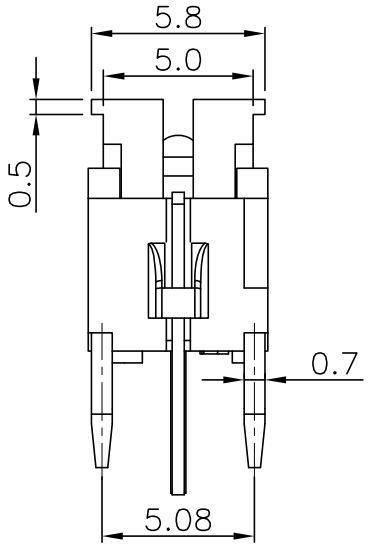

P.C.B LAYOUT

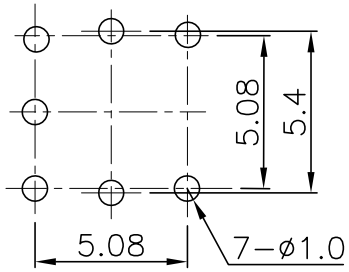

ITEM	PART NAME	MATERIAL
5	TERMINAL	Bronze Silver Plated
4	CONTACT	SUS
3	LED	GaAsP/GaP
2	BUTTON	POM
1	HOUSING	PBT

东莞市溪榜电子有限公司
DONG GUAN XI BANG ELECTRONI CS CO., LTD.
Switch Connector

LED COLOR								
1	2	3	4	5	6	23	13	12
Red	Yellow	Green	Blue	White	Pure Green	Yellow Green	Red Green	Red Yellow

TOLERANCE				PART NO.:	TITLE	TACT SWITCH
UNLESS OTHERWISE STATED				带灯开关		
X.X	±0.25	∠	±0.5°	DRAWN wang DATE 2012.05.16	MODEL	XB-TS-LED-HF01-1M-XX
X.XX	±0.1	UNIT	mm		MATL	
REV	A	SCALE	4:1	CHK'D DATE	FINISH	
SIZE	A4	SHEET	1 OF 1			