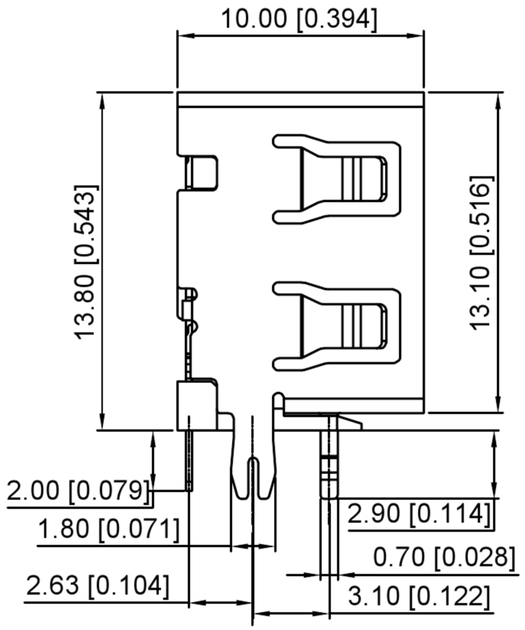


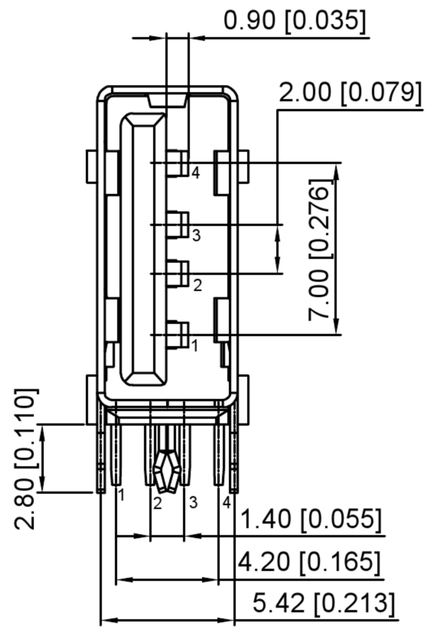


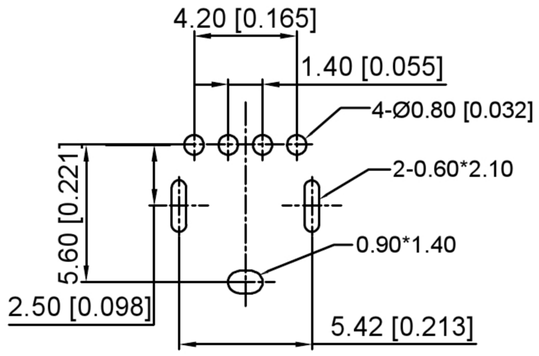


P.C.B LAYOUT

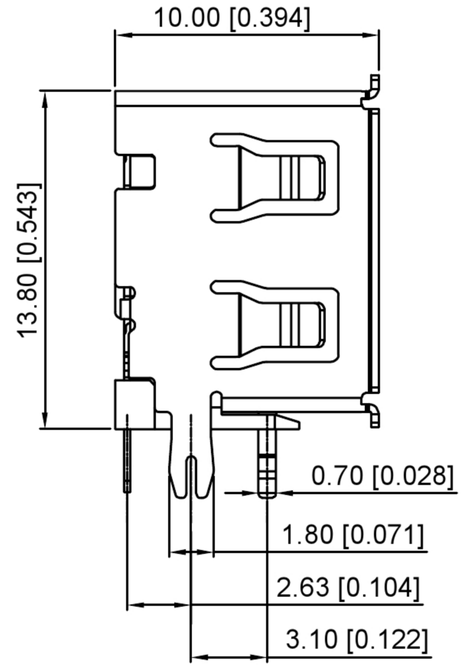


S:Scrolls

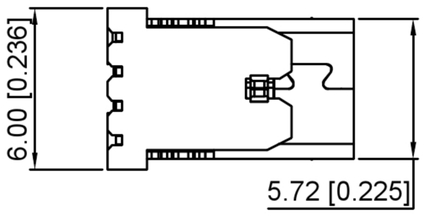


F:Flat

U221-04XN-1WC612-XS

- 1:Au 1U"
  6:Au 30U"
- 1:PBT
  2:PA6T
  3:PA9T
  4:LCP
- B:Black W: White
- S:Scrolls F:Flat
- S:Sus

Housing Material: PBT
UL94V-0, black/White
Contact Terminal: Brass
Metallic Shell: Sus

| | | | | | |
|---|---|---|---|---|---|
| | | | | ANGLAR | ±5° |
| | | | | L≤ 4 | ±0.2 |
| | | | | 4<L≤ 16 | ±0.3 |
| | | | | 16<L≤ 63 | ±0.4 |
| | DATE | REVISED | APPROVED | L> 63 | ±0.5 |
| REVISIONS | | | | UNSPECIFIED TOLERANCES | |

www.alpsr.com www.gdxjdz.com www.xbswitch.com

| | | | |
|---|---|---|---|
| DSND | | SCALE: N/A | MODEL TYPE: USB 2.0 |
| DWN | | VIEW: | PART NO.: |
| CHKD | | UNIT: mm/in | DWG NO.: U221-04XN-1WC612-XS |
| APPD | | SIZE: A4 | |

DONG GUAN XI BANG ELECTRONIC CO., LTD

| WEIGHT | SHEET | REVISION |
|---|---|---|
| | 1/1 | A0 |