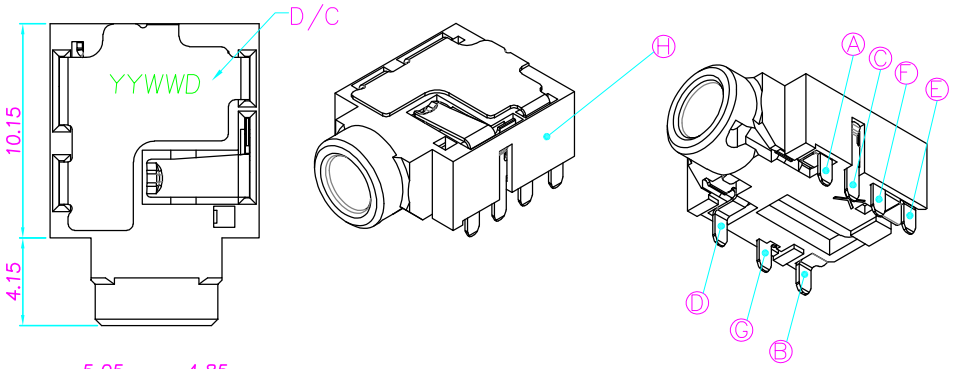

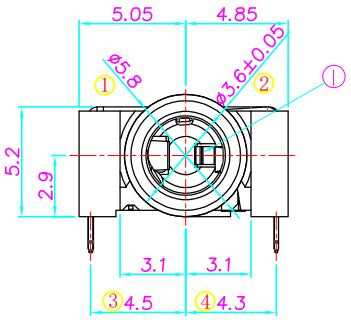

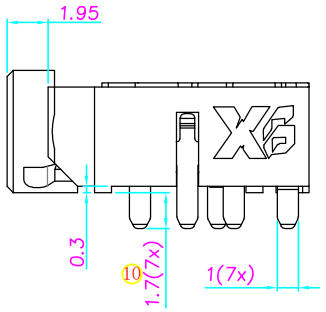

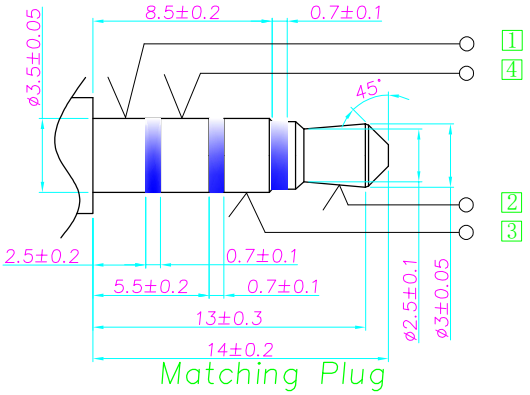

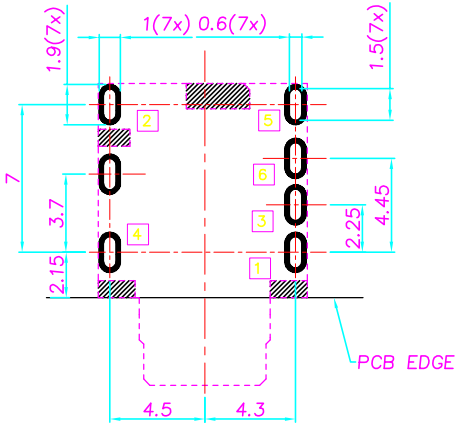

RECOMMENDED P.C.B LAYOUT(t=1.0mm)
TOP VIEW (TOLRANCE:±0.05)

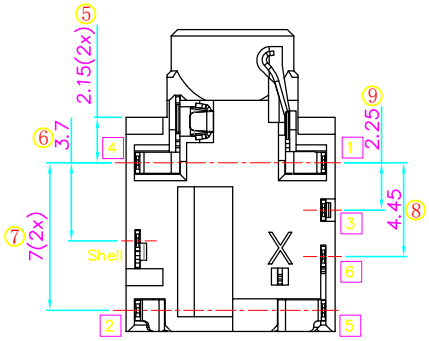

SPECIFICATION:

1. Electrical characteristics
   - 1-1. Current rating:1A Max.
   - 1-2:Voltage rating:AC 150V.
   - 1-3:Contact resistance:50mΩ Max.(Initial)
     100mΩ Max.(After humidity test)
   - 1-4. Insulation resistance:100MΩ Min.(Initial)
     50MΩ Min.(After humidity test)
   - 1-5. Withstanding voltage:500V AC for 1 minute.
2. Mechanical characteristics
   - 2-1. Life test:5000 cycles Min,
   - 2-2. Mating force:3～30N,
     Unmating force:3～30N.
3. Salt spray test time:24 hours Min.
4. Sign"ⓧⓧ"is importance dimension.

SCHEMATIC

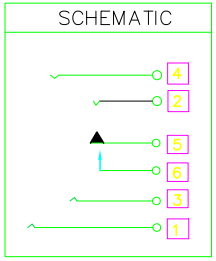

NO.	DESCRIPTION	QTY	MATERIAL	REMARK
Ⓘ	Housing	1	PA10T,UL94 V-0	Black
Ⓗ	Insulator	1	PA10T,UL94 V-0	Black
Ⓖ	Shell	1	Stainless steel,t0.20	Plating Ni
Ⓕ	Shunt terminal 6	1	Phosphor bronze, t0.20	Gold 5u" Plating on contact area. Gold flash plating on solder area 50u"Min. nickel underplating overall
Ⓔ	Transfer spring 5	1	Phosphor bronze, t0.20	
Ⓓ	Ring spring 4	1	Phosphor bronze, t0.20	
Ⓒ	Ring spring 3	1	Phosphor bronze, t0.20	
Ⓑ	Tip spring 2	1	Phosphor bronze, t0.25	
Ⓐ	Earth spring 1	1	Phosphor bronze, t0.20	

UNLESS OTHERWISE SPECIFED TOLERANCES

DECIMALS: DIM	TOL	ANGLES: DIM	TOL
X.	±0.50	X.	±2°
X.X	±0.30	X.X	±1°
X.XX	±0.20	X.XX	
X.XXX	±0.10	X.XXX	

3RD ANGLE PROJECTION

UNIT: mm

东莞市溪榜电子有限公司
DONG GUAN XI BANG ELECTRONI CS CO., LTD.

DESIGN:	Tony 2020.3.15	PART NAME: Φ3.5mm Phone Jack 板上型(CH=2.9)
CHECK:		PART NO. XB-PJ03506-0325-30000H
APPROVED	Andy 2020.3.15	SHEET: 1/1 REV.: A1
		DRAWING NO

REV.	ECN NO.	DESCRIPTION	DESIGN	DATE