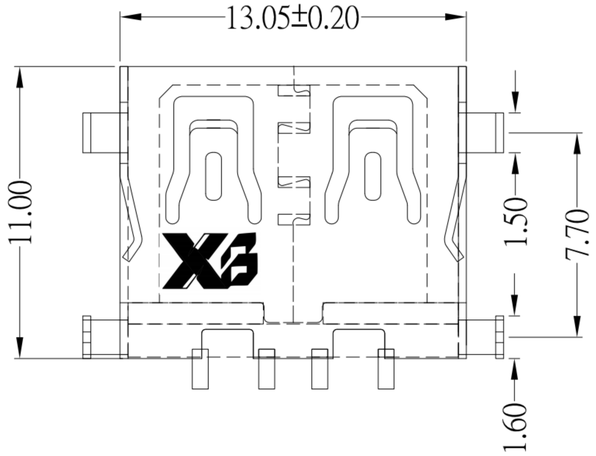

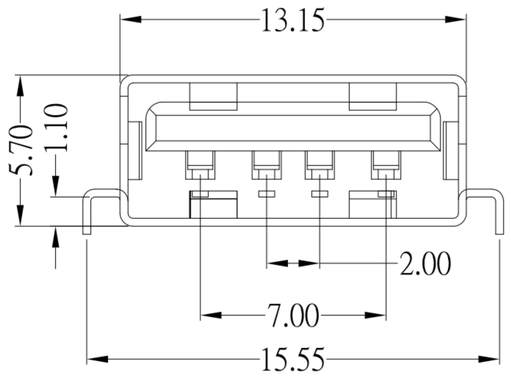

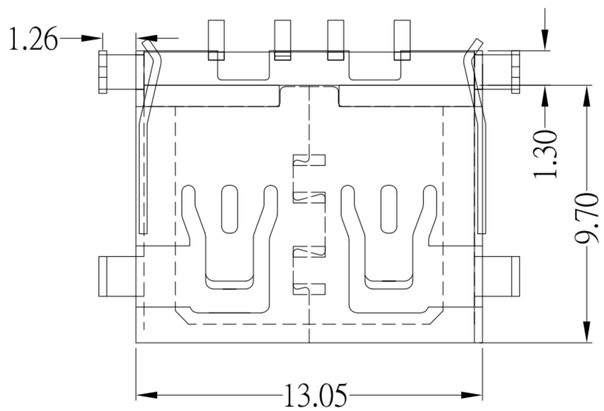

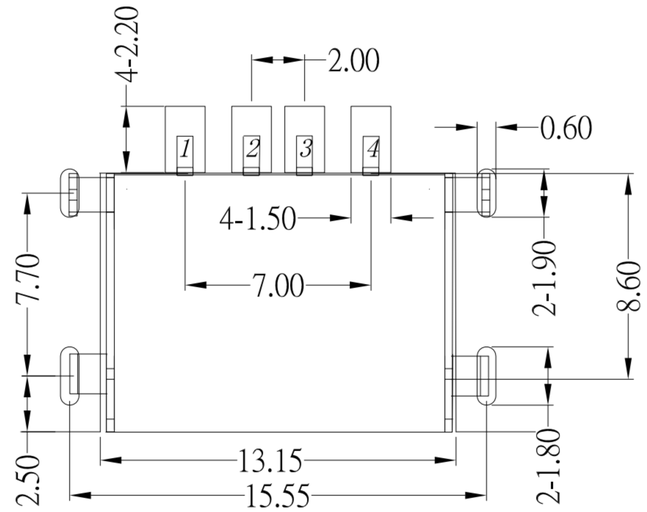

RECOMMEND P.C.B LAYOUT COMPONENT

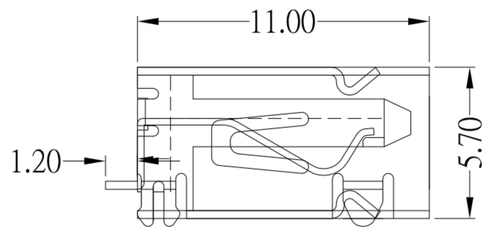

RoHS Compliant

SUA-110E14Ax-x-S235

Shell Material :

Blank : Brass
I : SPCC

Color :

White : W
Black : B

SPECIFICATIONS

Electrical:

1.Voltage Current Rating: 1.5 A , 30V DC

2.Contact Resistance: 30 mΩ Max

3.Insulation Resistance: 1,000 MΩ Min

4.Dielectric Withstanding Voltage: 500 V AC

5.Mating Force: 3.57 Kg Max

6.Umating Force: 1.02 Kg Min

Material:

1.Housing: PBT

2.Contact: Brass

3.Shell: Brass / Spcc

Finish:

1.Contact: Plated Gold in Mating Area ;
Tin Plated on Solder Balls ;
Nickel under plated overall

2.Shell: Nickel under Plated surface layer

ITEM NO.	DESCRIPTION	DRAWN	DATE
2	更新樣式	Jack	050719
1	更新PCB LAYOUT	Jack	072618

东莞市溪榜电子有限公司
Switch Connector DONG GUAN XI BANG ELECTRONICS CO., LTD

TOLERANCE UNLESS OTHERWISE STATED : Up to 5 ±0.2; Above 5 ~ 15 ±0.3; Above 15 ~ 30 ±0.4; Above 30 ~ 50 ±0.5; Angle ±0.3°

3RD. ANGEL'S | UNITS MM

DRAWN BY: Jack Lu	DATE 05/07/19	MAT'L	
CHECKED BY: Jacky Chen	DATE 05/07/19	FINISH	
APPROVED BY: Tony Kao	DATE 05/07/19	SCALE	1 : 1
		SHEET NO.	1 of 1

TITLE	CONNECTOR		
MODLE	USB AF SMT 無捲邊 沉板 H4.60mm		
DWG NO.	SUA-110E14Ax-x-S235	SIZE	A4
PART NO.	SUA-110E14Ax-x-S235	VER	R2