REV	DESCRIPTION	DESIGN	DATE
A	Release	吴丹平	2017.03.14
B	改善因线插入时簧片翘起	邵敬和	2017.05.10
C	电镀亮锡改成镀银 卡线处结构变更	吴丹平	2017.08.05
D	额定电压125V变更为275V	周秀龙	2017.11.16

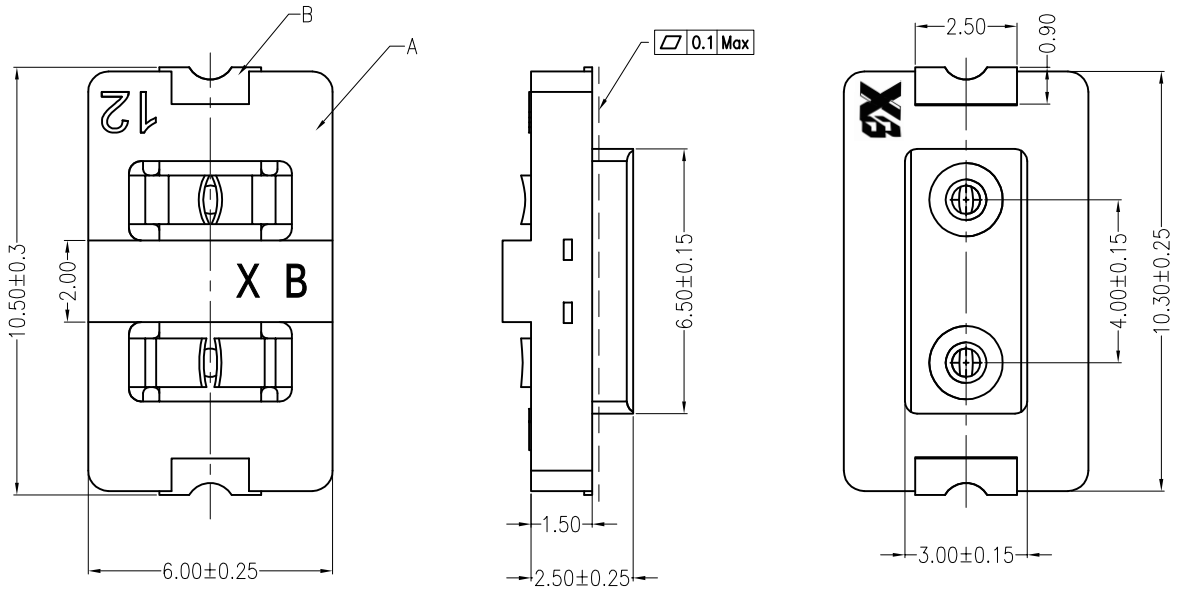

主要技术参数 Main Specifications

线　　数 (Poles): 02 to 04
接触电阻 (Contact resistance):≤20mΩ
绝缘电阻 (Insulation resistance):≥1000MΩ
额定电压 (Rated voltage):275V AC DC [D]
额定电流 (Rated current):1.0A AC DC
耐 电 压 (Withstand Voltage): 1000V AC/minute
温度范围 (Temperature Range) :-40℃～ +120℃

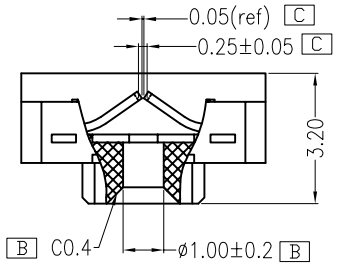

ORDER INFORMATION:

XB-L034AFV-02-F4MS1-*-1

- PART No.: L034AFV
- No.OF CIRCUITS: 02
- PLASTIC MATERIAL: F4M=LCP(BEIGE)
- PLATING: S=Silver [C]
- Metal code: 1=PhosphorBronze
- PACKAGING: R=REEL, P=PE
- SPECIAL CODE: 1=插ø0.5~ø0.6铜丝

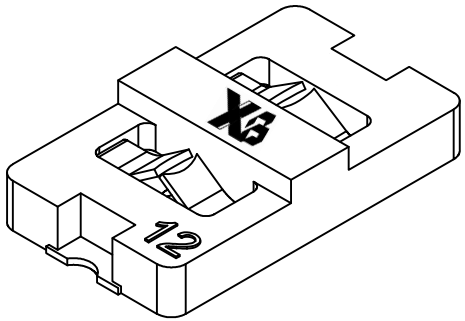

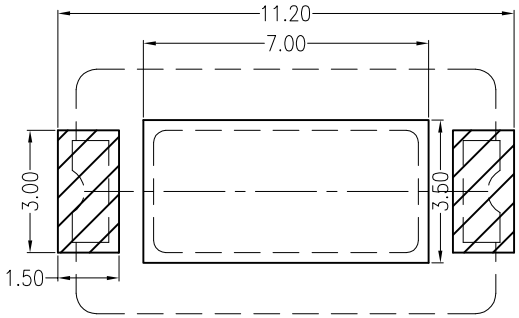

Board Layout

General Tolerance:±0.05

ITEM	COMPONENT		Q'TY	MATERIAL	FINISH
C					
B	CONTACT		2 PCS	PhosphorBronze	Silver-plated
A	HOUSING		1 PCS	LCP	UL 94V-0, COLOR:BEIGE

东莞市溪榜电子有限公司
Switch Connector DONG GUAN XI BANG ELECTRONICS CO., LTD

X.±0.35	X.±	USE: MANUFACTURE	TITLE: 4.0Pitch 180°wafer smt type
.X±0.25	.X±	APPD: 邵敬和	PART NO.: L034AFV-02-F4MS1-R-1
.XX±0.15	.XX±	CHKD: 田峰	DWG NO.: GCCP-0435
--	--	DR: 蒋建银	SCALE 1 : 1 / SHEET 1 / 1
	UNITS: mm		