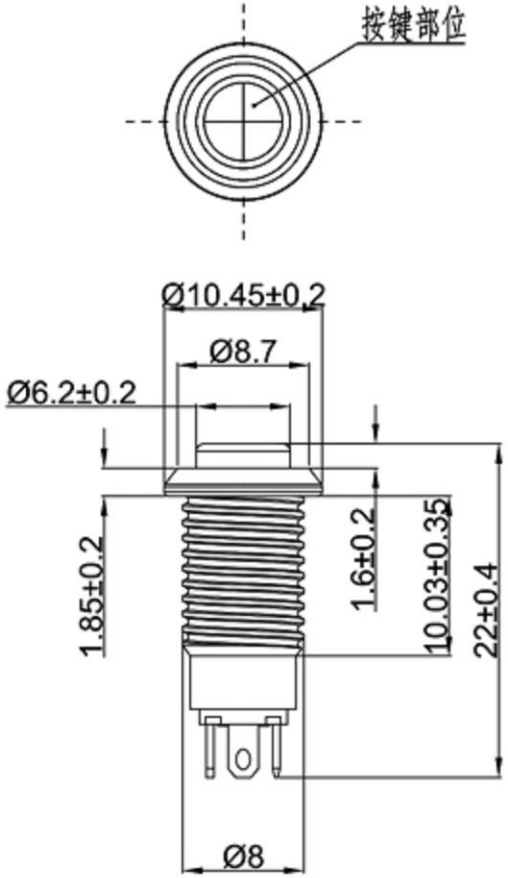

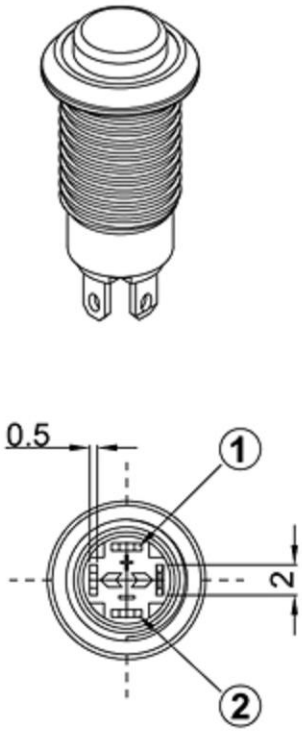

PANEL MOUNTING

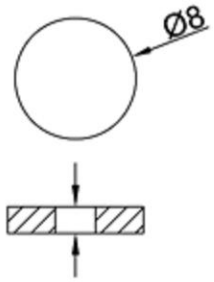

6.5mm MAX.

FUNCTION

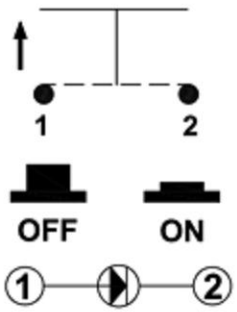

ROHS

SPECIFICATIONS

Circuit	:SPST
Current rating	:0.5A
Voltage rating	:250VAC
Dielectric withstanding voltage	:1000VAC for 1 minute
Contact resistance	:50mΩ Max
Inslation resistance	:100MΩ Min
Travel	:2.0mm±0.5mm
Operating Force	:600±200gf
Mechanical Life	:Over 100,000 cycles
Electrical Life	:Over 50,000 cycles
Manual Welding	:350°C for 3 seconds
Function	:OFF-(ON)
Operating temperature	: -20°C ~ +85°C
Level of Protection	: IP65

MATERIAL:
- Base: SUS;
- Cap: SUS;
- Terminal: Copper,Golden plated ;
- Nut: Brass, NI Plated .

MATERIAL:
- Actuator: SUS ;
- Top Base: SUS;
- Buttom Base:PA66+GF ;
- Terminal: Brass,Silver plated ;
- Nut: Brass, Ni plated .

LED Specifications

LED 类型	双向LED灯珠（交直流通用）		
寿 命	40000小时（参考值）		
额定电压	AC/DC12V	AC/DC24V	AC/DC110V
	AC/DC36V	AC/DC48V	AC/DC220V
额定电流	约15mA		约3mA
降压方式	采用3V灯，需内置电阻		

灯发光颜色 X Emitted color X		最小	一般	最大	额定电流 (mA)
		顺向电压(V)			
W6	白色	5.0	6.0	9.0	15
U6	蓝色	5.0	6.0	9.0	15
G6	纯绿色	5.0	6.0	9.0	15
Y6	黄色	5.0	6.0	9.0	15
R6	红色	5.0	6.0	9.0	15
W3	白色	2.8	3.0	3.4	15
U3	蓝色	2.8	3.0	3.4	15
G3	纯绿色	2.8	3.0	3.4	15
Y2	黄色	1.8	2.0	2.4	15
R2	红色	1.8	2.0	2.4	15

The material contained in this drawing is the property of XiBang. Any use other than that speclfically authorized by XiBang i5 prohibited. The above drawing IS subjected to change for improvement without prior notice.

Switch Connector

东莞市溪榜电子有限公司
DONG GUAN XI BANG ELECTRONICS CO.,LTD

TITLE : METAL PUHS BUTTON SWITCH
MODEL : XB-PBM8-M-H-RU3-SO

UNIT : MM	DWN.	ZENQ. CHEN	DATE	
SCALE : 3 : 1	CHK'D	PENG. GAO	DATE	
VERSION 01	APPD.	FEI. LONG. HE	DATE	

TOLERANCE	ANGLE
<=1.5mm±0.1 > 1.5mm±0.2 >=10mm±0.3	±2°

NO.	PART NAME	MATERIAL	QTY.	FINISHING
7	SPRING	STEEL WIRE	1	NATURE
6	STEEL BALL	STEEL	1	NATURE
5	BOARD	PHENOLIC RESIN	1	NATURE
4	CONTACT CLIP	PBS STRIP	2	Ag PLATED
3	FRAME	IRON STRIP	1	Ni PLATED
2	TERMINAL	BRASS STRIP	8	Ag PLATED
1	KNOB	POM	1	BLACK