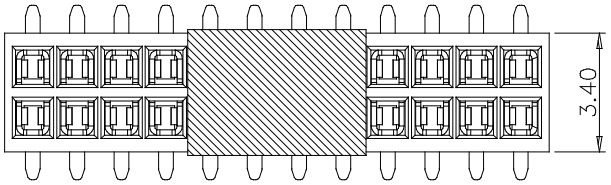

Type	Dim.D	Note
kapton	5.10	04~25 Pins
	10.00	26~40 Pins

Specifications
Current Rating:1Amp
Insulation Resistance:1000MΩMin.
Dielectric Withstanding Voltage:300VAC
Contact Resistance:20mΩMax.
Operating Temperature:−40°C to +105°C
Materials
Contact Material:Phosphor Bronze
Insulator Material:
Nylon(High temperature resistance),
LCP(High temperature resistance),
UL 94V−0
All materials must meet XI BANG requirement for environment protection.

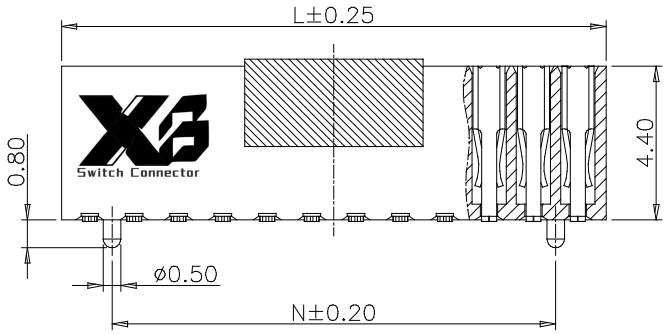

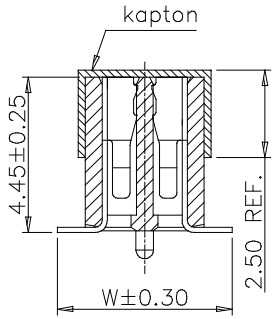

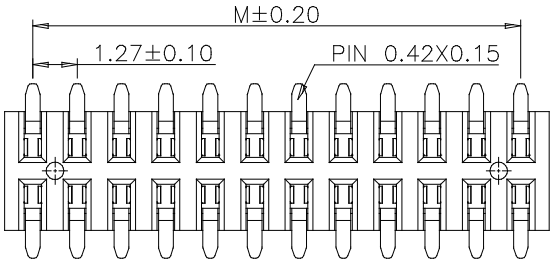

Recommended P.C.Board Layout
(Tolerance:±0.05)

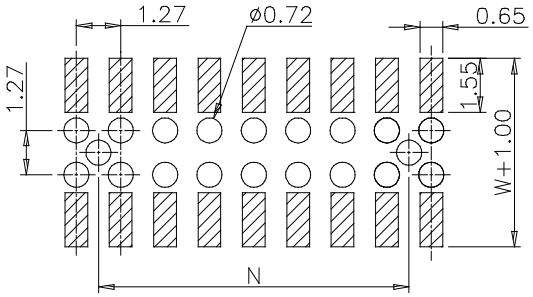

No. of PIN/ROW	Dimension Information		
	Dim.M	Dim.L	Dim.N
03	2.54	4.16	1.27
04	3.81	5.43	2.54
05	5.08	6.70	3.81
06	6.35	7.97	5.08
07	7.62	9.24	6.35
08	8.89	10.51	7.62
09	10.16	11.78	8.89
10	11.43	13.05	10.16
11	12.70	14.32	11.43
12	13.97	15.59	12.70
13	15.24	16.86	13.97
14	16.51	18.13	15.24
15	17.78	19.40	16.51
16	19.05	20.67	17.78
17	20.32	21.94	19.05
18	21.59	23.21	20.32
19	22.86	24.48	21.59
20	24.13	25.75	22.86
21	25.40	27.02	24.13
22	26.67	28.29	25.40
23	27.94	29.56	26.67
24	29.21	30.83	27.94
25	30.48	32.10	29.21
26	31.75	33.37	30.48
27	33.02	34.64	31.75
28	34.29	35.91	33.02
29	35.56	37.18	34.29
30	36.83	38.45	35.56
31	38.10	39.72	36.83
32	39.37	40.99	38.10
33	40.64	42.26	39.37
34	41.91	43.53	40.64
35	43.18	44.80	41.91
36	44.45	46.07	43.18
37	45.72	47.34	44.45
38	46.99	48.61	45.72
39	48.26	49.88	46.99
40	49.53	51.15	48.26

Ordering Information

218 – XX XX B XXX R 1 A X

- **218**: Plastic specifications
  1=Single row
  2=Dual row
  3=Tripe row
  4=Quadruple
- **XX**: Water code
- **XX**: No. of Pins per Row
  03~40
- **B**: Positioning column information
  A=No locating post
  B=Round post
  C=Square post
- **XXX**: Pin length
  See the drawing
- **R**: Insulator Material
  R=Nylon(Halogen Free)
  C=LCP
- **1**: Color
  1=Black
  2=White
  3=Yellow
  E=Beige
- **A**: Contact Material
  A/S/K/T=Phosphor Bronze
- **X**: Packing code
  C=Tube
  D=Tape&Reel
  G=Acetate Tape+Tube
  H=Acetate Tape+Tape&Reel

Plating code
01=Tin
02=Gold Flash
05=Gold Flash/Tin
22=Matte Tin

东莞市溪榜电子有限公司 DONG GUAN XI BANG ELECTRONI CS CO., LTD.	GENERAL TOLERANCE		DESIGN:	DATE:	DWG. NO. XB-PM-C-127-218	TITLE. 1.27 FEMALE HEADER DUAL ROWS SMT TYPE CONNECTOR
	X.°±5.0°	X.±0.30	CHECKED:	DATE:		
	.X°±3.0°	.X±0.25	AUDITED:	DATE:	PART NO.	
	.XX°±2.0°	.XX±0.15	APPROVED:	DATE:		
	.XXX°±1.0°	.XXX±0.10				
REV. 01 / UNIT. mm / SCALE. 5:1 / PAGE. 1/1						