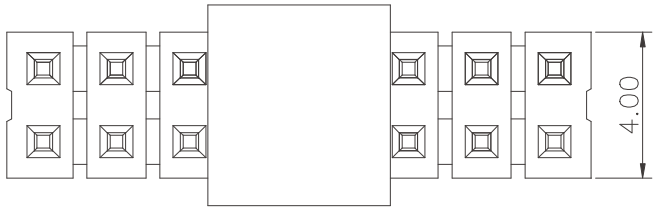

Dim.E	NOTE
4.00mm	02PIN
5.00mm	03~08PIN
8.16mm	09~40PIN

Specifications
Current Rating:2.0Amp
Insulation Resistance:1000MΩMin.
Dielectric Withstanding Voltage:500VAC
Contact Resistance:20mΩMax.
Operating Temperature:−40°C to +105°C
Materials
Contact Material:
Brass(Pin length less than 25mm)
Phosphor Bronze(The total length of pin is more than 25mm)
Insulator Material:
PBT(Not resistant to high temperature),
Nylon(High temperature resistance),
LCP(High temperature resistance),
UL 94V−0
All materials must meet XI BANG hazardous substances control standards.

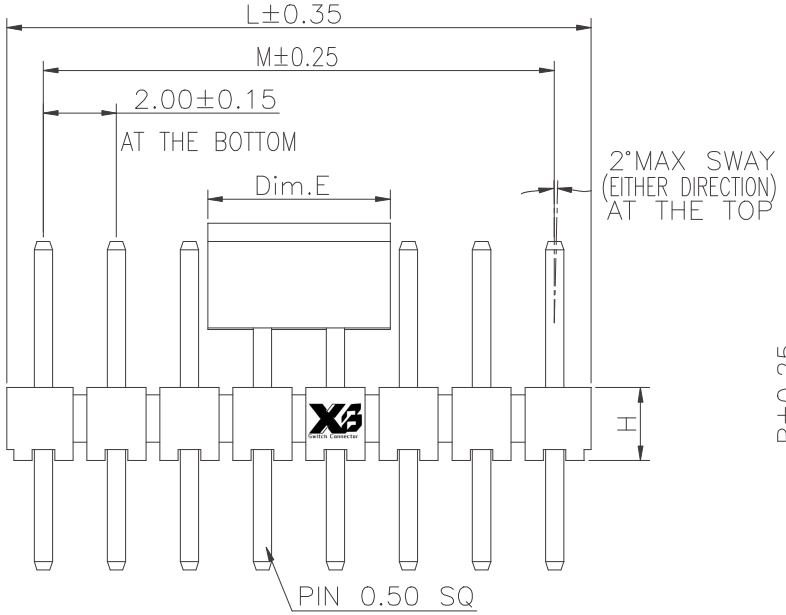

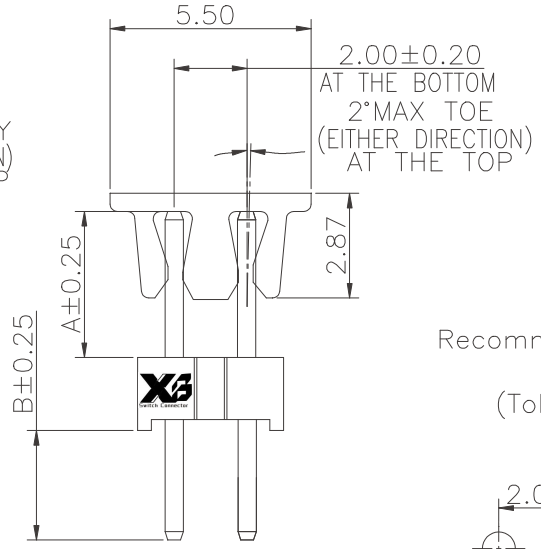

Recommended P.C.Board Layout
(Tolerance:±0.05)

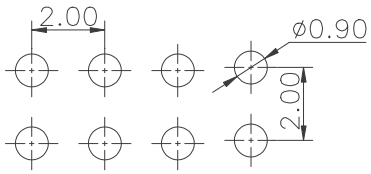

No. of PIN/ROW	Dimension Information M	L
02	2.00	4.00
03	4.00	6.00
04	6.00	8.00
05	8.00	10.00
06	10.00	12.00
07	12.00	14.00
08	14.00	16.00
09	16.00	18.00
10	18.00	20.00
11	20.00	22.00
12	22.00	24.00
13	24.00	26.00
14	26.00	28.00
15	28.00	30.00
16	30.00	32.00
17	32.00	34.00
18	34.00	36.00
19	36.00	38.00
20	38.00	40.00
21	40.00	42.00
22	42.00	44.00
23	44.00	46.00
24	46.00	48.00
25	48.00	50.00
26	50.00	52.00
27	52.00	54.00
28	54.00	56.00
29	56.00	58.00
30	58.00	60.00

Ordering Information

XX – XX XX A XXX C 1 A X

- XX: Plastic specifications
  1=Single row
  2=Dual row
  3=Tripe row
  4=Quadruple
- XX: Water code
  12:H=2.00
  16:H=1.50
- XX: No. of Pins per Row
  02~30
- XX: Plating code
  01=Tin
  02=Gold Flash
  05=Gold Flash/Tin
  22=Matte Tin
- A: Positioning column information
  A=No locating post
  B=Round post
  C=Square post
- XXX: Pin length
  See the drawing
- C: Insulator Material
  A=PBT
  R=Nylon(Halogen Free)
  C=LCP
- 1: Color
  1=Black
  2=White
  3=Yellow
  E=Beige
- A: Contact Material
  A/S/K/T=Phosphor Bronze
  B/Z/H/W=Brass
- X: Packing code
  A=Box
  B=Tray
  C=Tube
  D=Tape&Reel
  E=Cap+Tube
  F=Cap+Tape&Reel

东莞市溪榜电子有限公司
DONG GUAN XI BANG ELECTRONI CS CO., LTD.
Switch Connector

REV.	UNIT.	SCALE.	PAGE.
01	mm	5:1	1/1

GENERAL TOLERANCE	
X.°±5.0°	X.±0.30
.X°±3.0°	.X±0.25
.XX°±2.0°	.XX±0.15
.XXX°±1.0°	.XXX±0.10

DWG. NO. XB-PZ-A-20-212

PART NO.

TITLE. 2.00 PIN HEADER DUAL ROWS DIP TYPE CONNECTOR