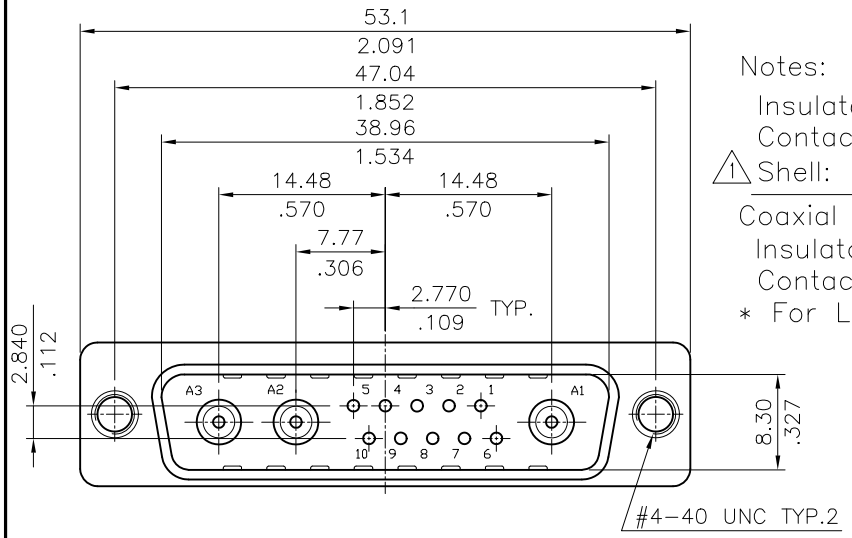

Notes:

Insulator: Glass filled Polyester UL 94V-0
Contact: Copper alloy
△1 Shell: Steel, Nickel plated as standard

Coaxial terminal
Insulator: Teflon UL 94V-0,Color white
Contact: Brass
* For Lead Free Wave Flow Process

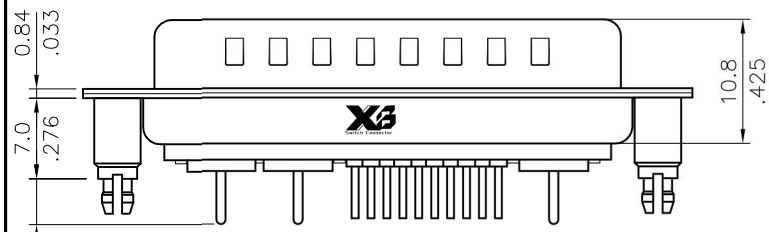

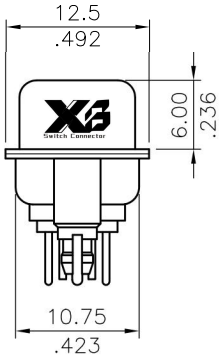

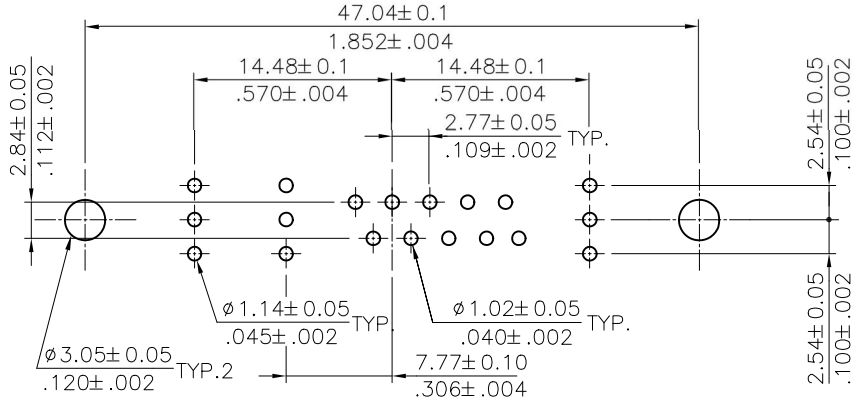

Recommended P.C Board Layout

Ordering Code

13W3	P	C	V	3	2	1	75	D00
①	②	③	④	⑤	⑥	⑦	⑧	⑨

① Series No.
② Connector Type: P= Plug
③ Contact type: C= Coaxiai Contact
④ Contact tail style: V= Straight Dip type
⑤ Coaxial contact plating:
2= Gold flash plated over Nickel
3= 15μ" Gold plated over Nickel
4= 30μ" Gold plated over Nickel
5= 50μ" Gold plated over Nickel
⑥ Signal contact plating:
2= Gold flash plated over Nickel
3= 15μ" Gold plated over Nickel
4= 30μ" Gold plated over Nickel
⑦ Insulator color: 1= Black, 6= Green
⑧ Performance: 50= 50Ω, 75= 75Ω
⑨ Mounting Style:
000= With ø3.05mm holes on shell
B00= Riveted #4-40 UNC open nuts on front shell
C00= Riveted #4-40 UNC open nuts on rear shell
D00= Riveted #4-40 UNC ground stand-off on rear shell(standard)

Mounting Style								Lead Free Process	RoHS Compliant
Code	000	Code	B00	Code	C00	Code	D00		
		DIM. L= 4.0mm		DIM. L= 4.0mm		DIM. L= 7.0mm			

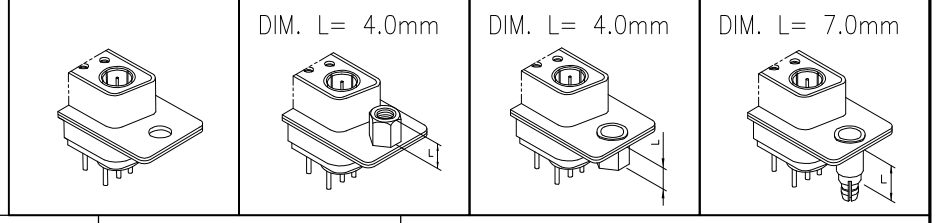

SYM	NAME	DATE	REVISIONS
△4			
△3			
△2			
△1	Karen	1/10-18'	ECNT117262/ECRT117074

		DATE
DRAWN BY:	Karen	1/10-18'
ENGINEER:	Sun	1/11-18'
CHECKED BY:	Eisley	1/11-18'
APPROVED BY:	Eisley	1/11-18'

UNIT: mm / inch

TOLERANCE UNLESS OTHERWISE SPECIFIED

.X ± 0.30/.012	X.° ± 1°
.XX ± 0.20/.008	.X° ±
.XXX ± 0.10/.004	.XX° ±

TITLE: 13W3 COAXIAL MALE D-SUB CONNECTOR (TOP ENTRY BOARD MOUNT TYPE)

MATERIAL:

FINISH:

东莞市溪榜电子有限公司
DONG GUAN XI BANG ELECTRONICS CO., LTD

DRAWING NO.	13W303SC	PART NO.	13W3PCV******00
SCALE	2 / 1	SHEET 1 OF 1	